Project Report

Student Name: Sachin Chuahan
UID: 24MCA20227
Branch: MCA
Section/Group: 2A
Semester: 4th
Date of Performance: 19/04/26
Subject Name: Internet of things lab
Subject Code:24CAP-751

Aim: To develop an IoT-based smart parking system that detects and displays real-time parking space availability to improve efficiency and reduce congestion.

Objectives:

1. To monitor parking space availability in real-time using sensors.
2. To reduce traffic congestion caused by searching for parking.
3. To save time and fuel for users.
4. To provide a user-friendly interface for viewing available slots.
5. To improve efficient utilization of parking spaces.

Components Required:

Sno	Name of Component	Qty.
1.	NodeMCU (ESP8266)	1
2.	Arduino UNO	1
3.	IR sensors	2
4.	LED	3
5.	I2C LCD monitor	1
6.	Breadboard	1
7.	Jumper wires	27
8.	Servo motor	1

Details of Components:

1. NodeMCU:

The NodeMCU board is a low-cost, open-source IoT platform widely recognized for its user-friendly approach to building Internet-connected projects. Based on the ESP8266 WiFi chip, it combines a microcontroller with WiFi capabilities, enabling developers to create connected devices with ease.

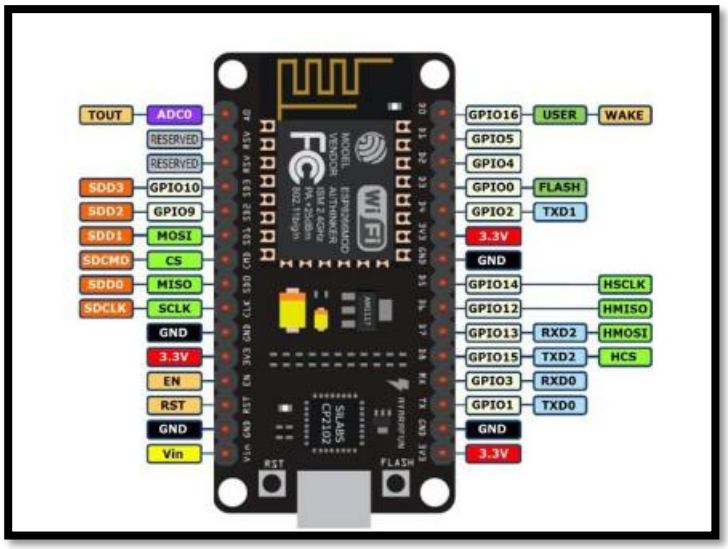

2. Arduino UNO:

Arduino Uno is a popular open-source microcontroller board based on the ATmega328P and is widely used in electronics and embedded system projects due to its simplicity and ease of use. It provides digital and analog input/output pins to connect sensors and control devices like LEDs and displays.

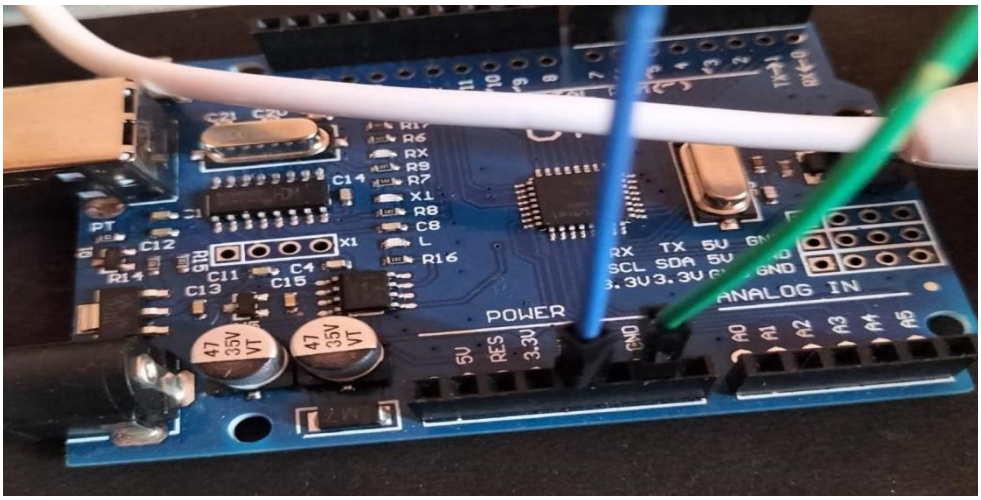

3. IR sensors:

IR Sensor Module is an electronic device used to detect objects using infrared light and is widely used in automation and embedded system projects due to its simplicity and low cost. It consists of an IR transmitter and receiver, where the transmitter emits infrared rays and the receiver detects the reflected rays when an object is present. It provides a digital output signal (HIGH/LOW) that can be easily read by microcontrollers like Arduino or NodeMCU.

4. LED:

Light Emitting Diode (LED) is a semiconductor device that emits light when electric current flows through it. It is commonly used as an indicator to show system status, such as parking availability. LEDs are low power, easy to use, and can be easily connected to microcontrollers like Arduino or NodeMCU.

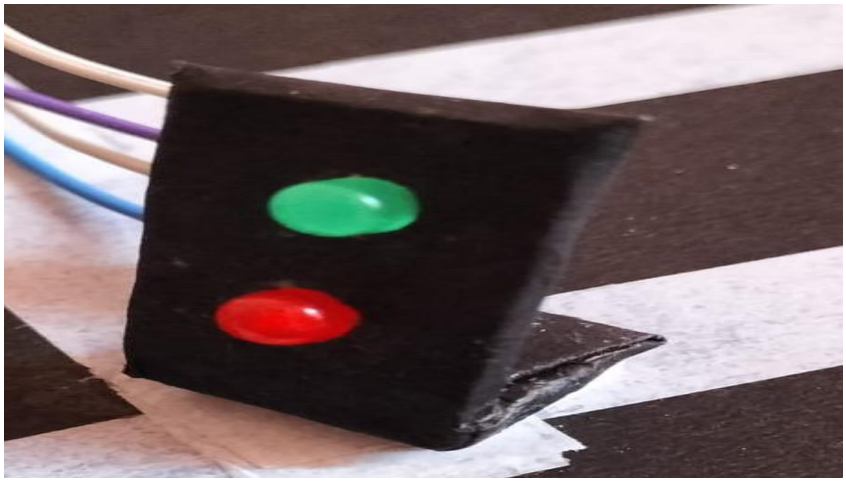

5. I2C LCD Monitor

I2C LCD Display is an electronic display module used to show text information and is widely used in embedded systems due to its simplicity and reduced wiring. It uses the I2C communication protocol, which requires only two wires (SDA and SCL) to connect with microcontrollers like Arduino or NodeMCU. It is commonly used to display data such as parking slot status, messages, or system output. Due to its easy interfacing and clear display, it is widely used in smart systems and IoT projects.

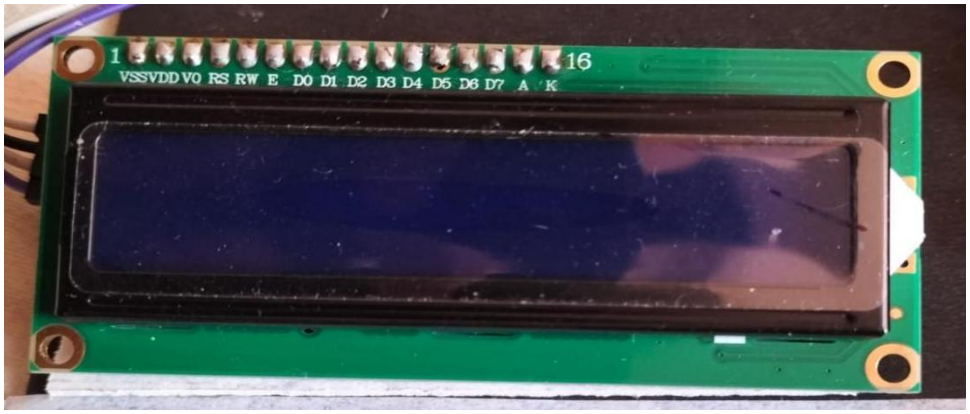

6. Breadboard

Breadboard is a device used to build and test electronic circuits without soldering. It allows easy connection of components like sensors, LEDs, and microcontrollers using jumper wires. Due to its reusable nature and simplicity, it is widely used for prototyping and testing circuits in projects.

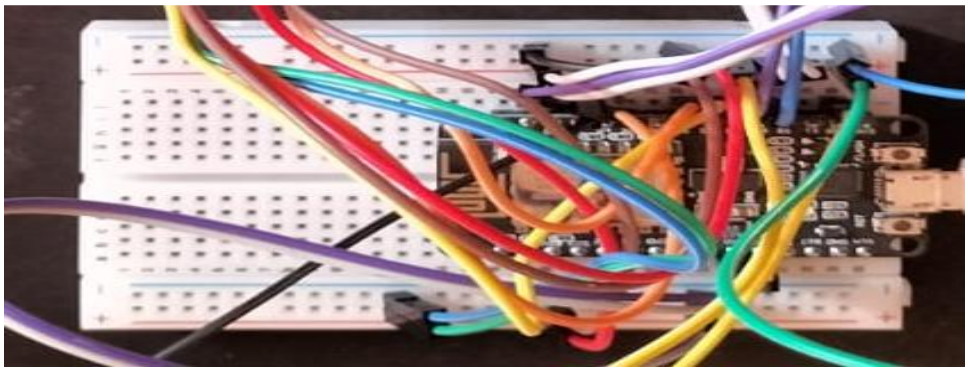

7. Jumper wires

Jumper Wires are electrical wires used to connect different components in a circuit without soldering. They are commonly used with breadboards to link microcontrollers, sensors, and other modules. Due to their flexibility and ease of use, they are widely used in prototyping and electronics projects.

8. Servo motor

Servo Motor is a small rotary actuator used to control angular position with high precision. It operates based on control signals from a microcontroller and can rotate to specific angles. It is commonly used in automation projects, such as opening and closing a parking gate in a smart parking system.

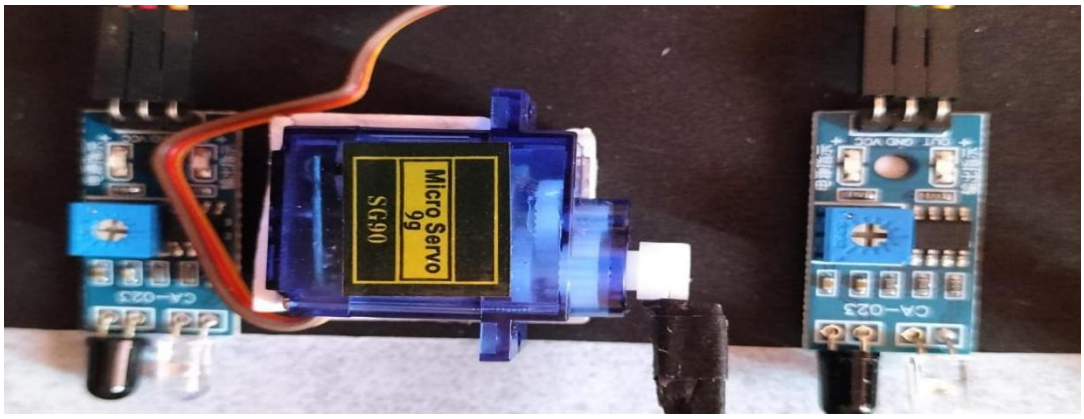

Block Diagram:

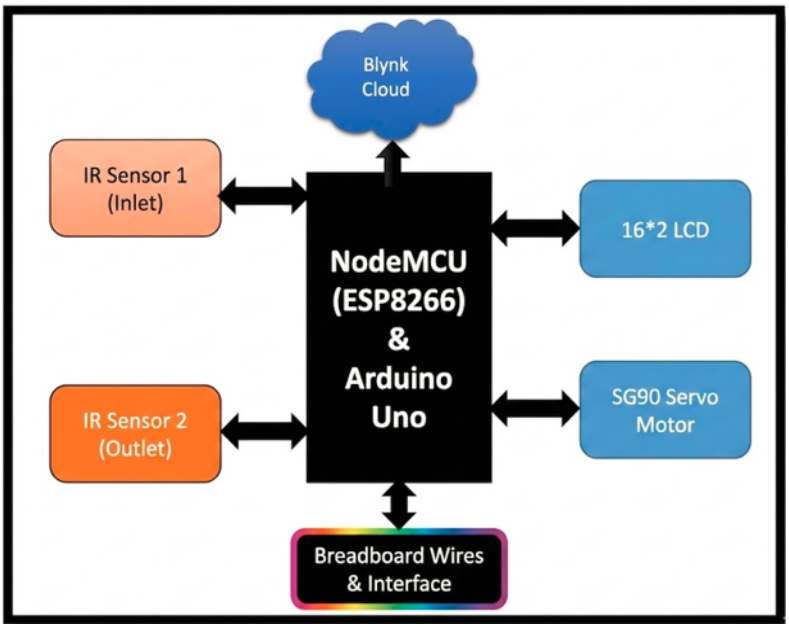

Working of block diagram:

- The system works by using IR sensors, a microcontroller, and cloud connectivity to manage parking efficiently. When a vehicle arrives at the entry point, **IR Sensor 1 (Inlet)** detects the vehicle and sends a signal to the controller (NodeMCU/Arduino). The controller processes this signal and checks for available parking space.
- If space is available, the controller activates the **servo motor**, which opens the parking gate to allow the vehicle to enter. At the same time, the system updates the parking status and displays it on the **16×2 LCD**, showing available or occupied slots.

- When the vehicle exits, **IR Sensor 2 (Outlet)** detects it and sends a signal to the controller. The system then updates the parking count, closes the gate using the servo motor, and refreshes the display.
- All the parking data is also sent to the cloud platform (Blynk), allowing users to monitor parking availability in real time through a mobile app. The breadboard and jumper wires are used to connect all components and ensure proper communication between them.

Pictures of Prototype:

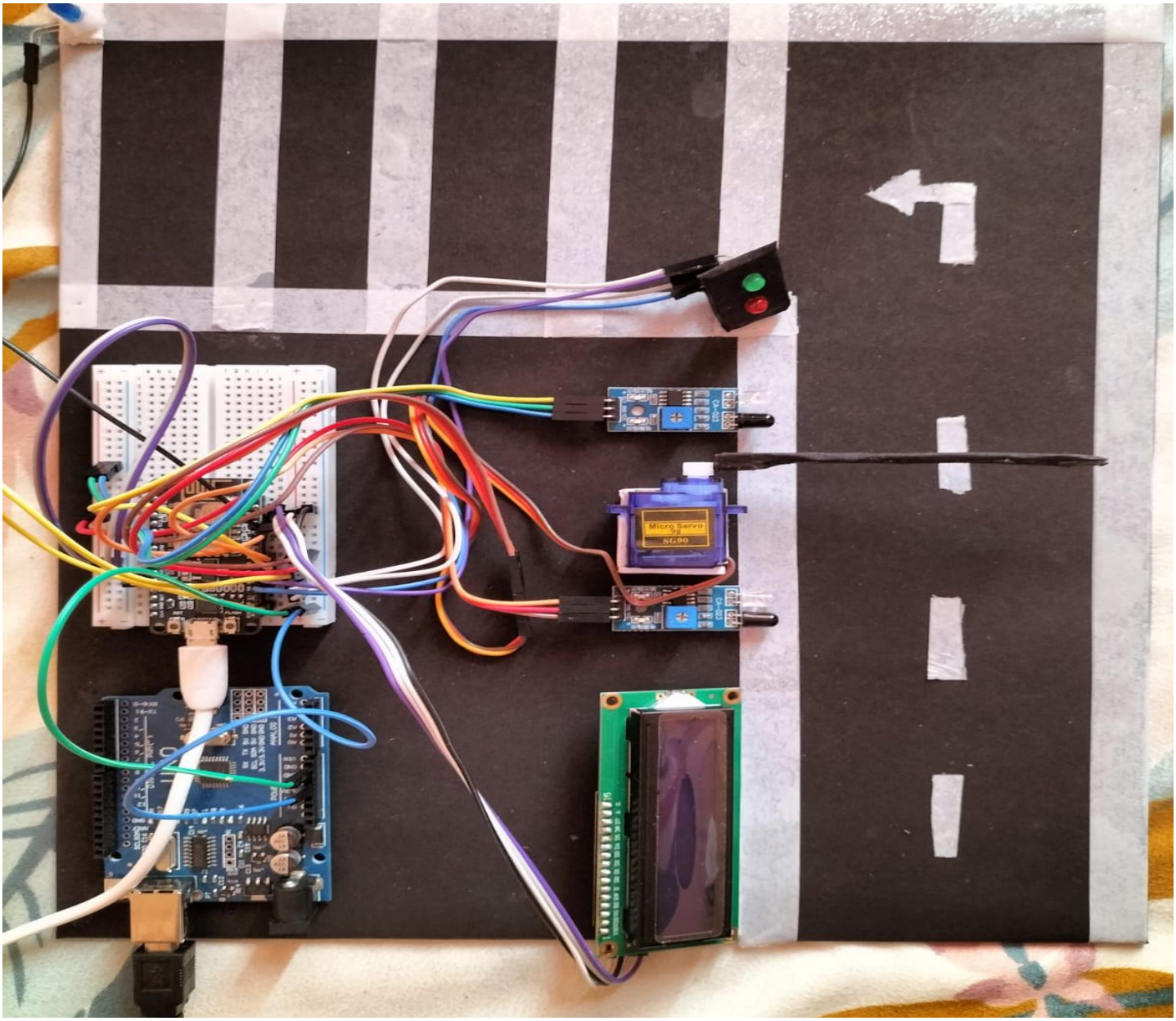

Output of Deigned Model/Prototype (Blynk Cloud):

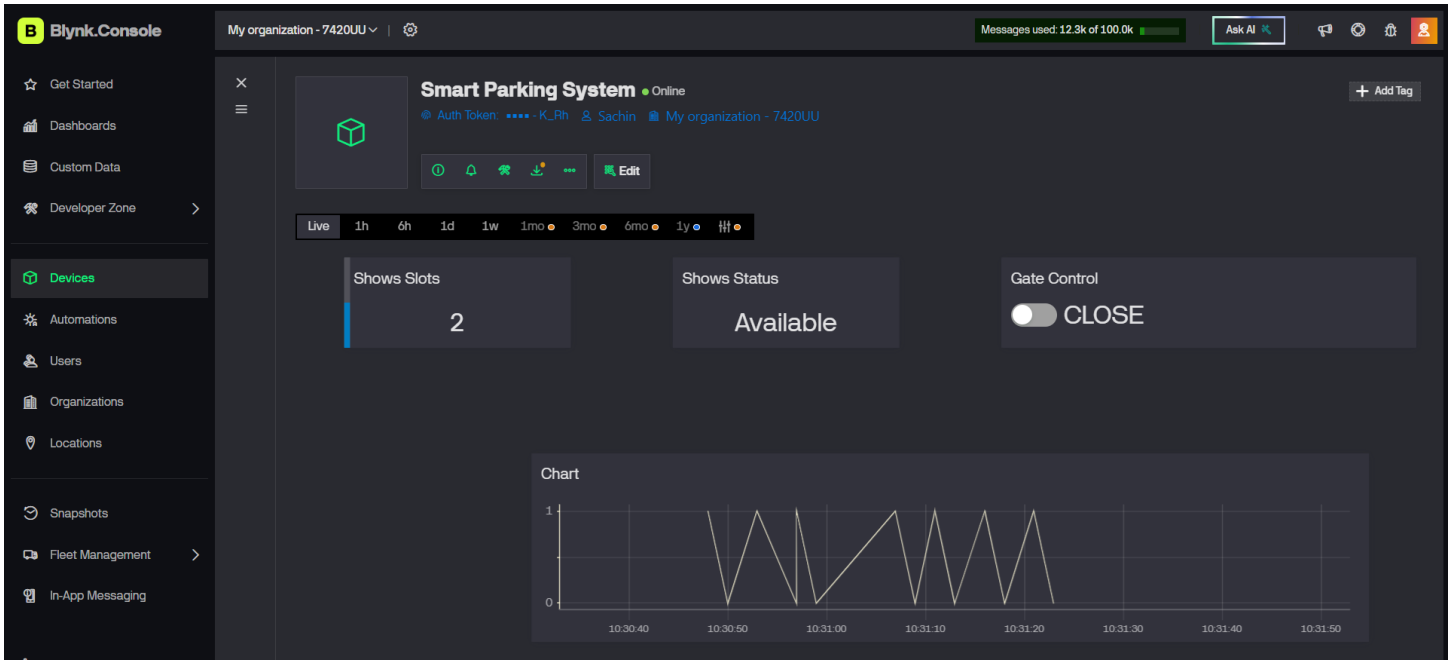

Learning outcomes (What I have learnt):

1. Learn to interface sensors with a microcontroller.
2. Gain knowledge of real-time data monitoring.
3. Develop skills in wireless communication (Wi-Fi).
4. Understand integration of hardware and software in IoT systems.
5. Understand how to design and implement a smart system for automation.